Saison 2025 - 2026

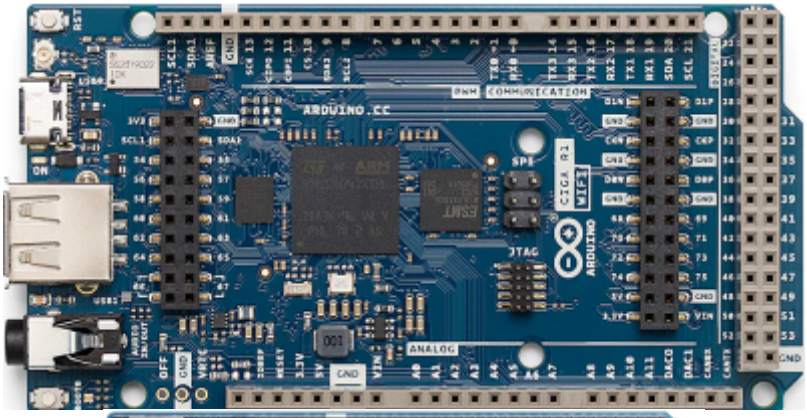
ARDUINO.CC
COMMUNICATION
ANALOG
JTAG
SPI
GIGA R1
WIFI

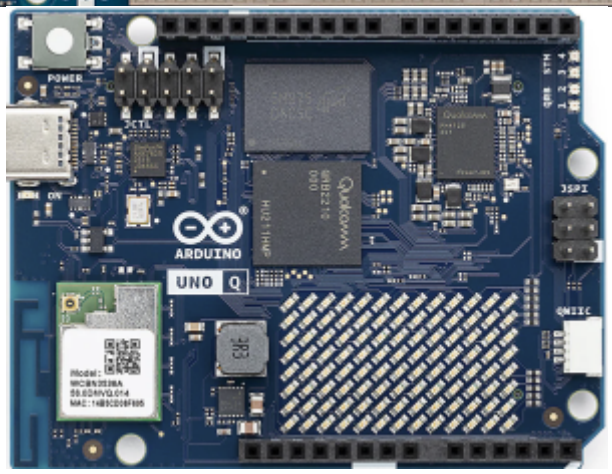
POWER
ARDUINO
UNO Q
QWIIC

Raspberry Pi 5
HDMI

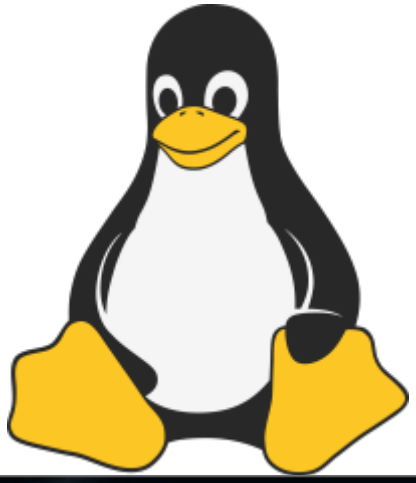

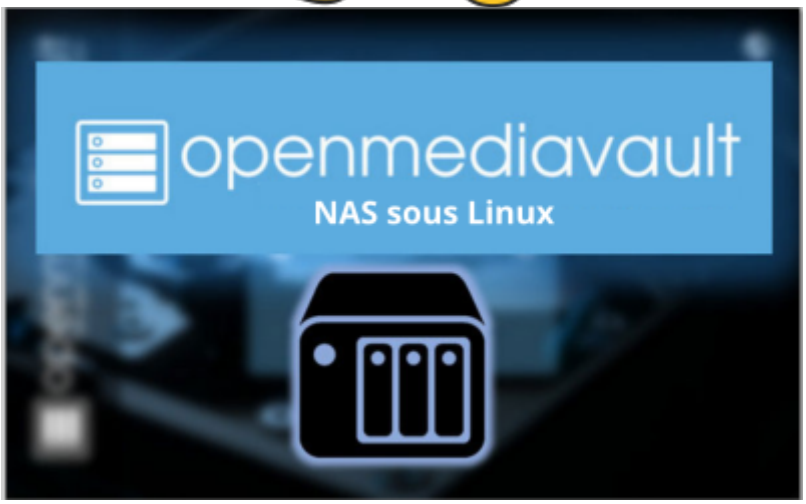
openmediavault
NAS sous Linux

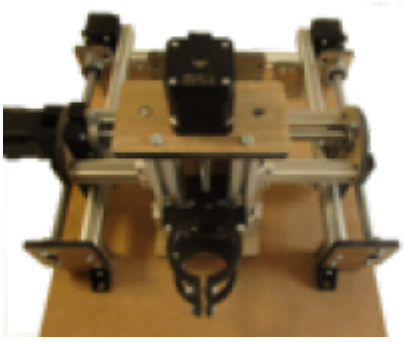

CREALITY
Falcon2 Pro

CRALLERY

PRUSA
MK4

CREALITY

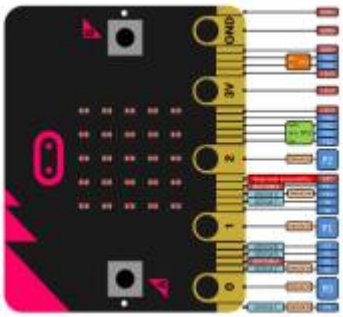
GND
3V
2
1
0

From:
https://www.fablab37110.chanterie37.fr/ - **Castel'Lab le Fablab MJC de Château-Renault**

Permanent link:
https://www.fablab37110.chanterie37.fr/doku.php?id=start&rev=1763034238

Last update: **2025/11/13 12:43**