Branchement Leds ...

Materiels

1. 2 leds
2. 2 resistances
3. la soudure
4. la gaine thermo
5. 1 mini interrupteurs

schema Principe

1 Led

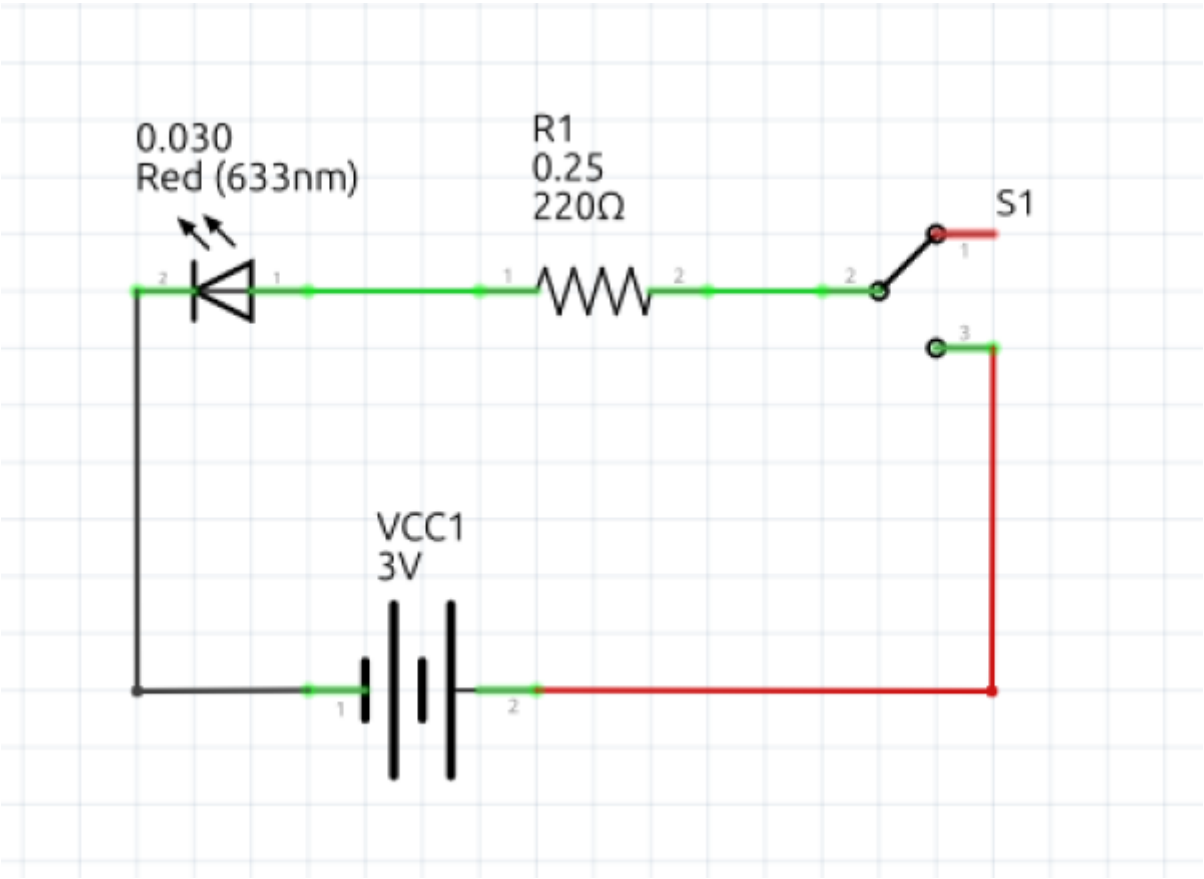

2 Leds

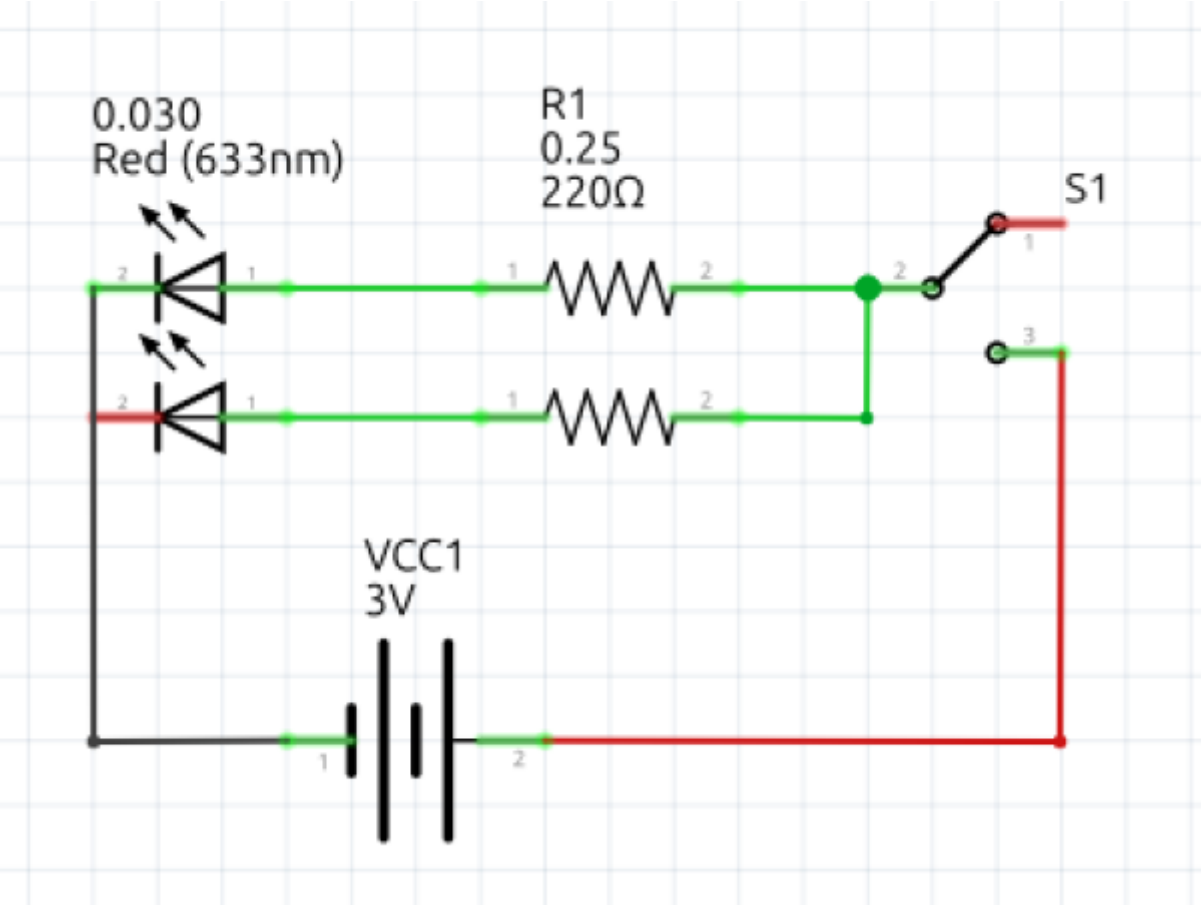

Schema cablage

1 led

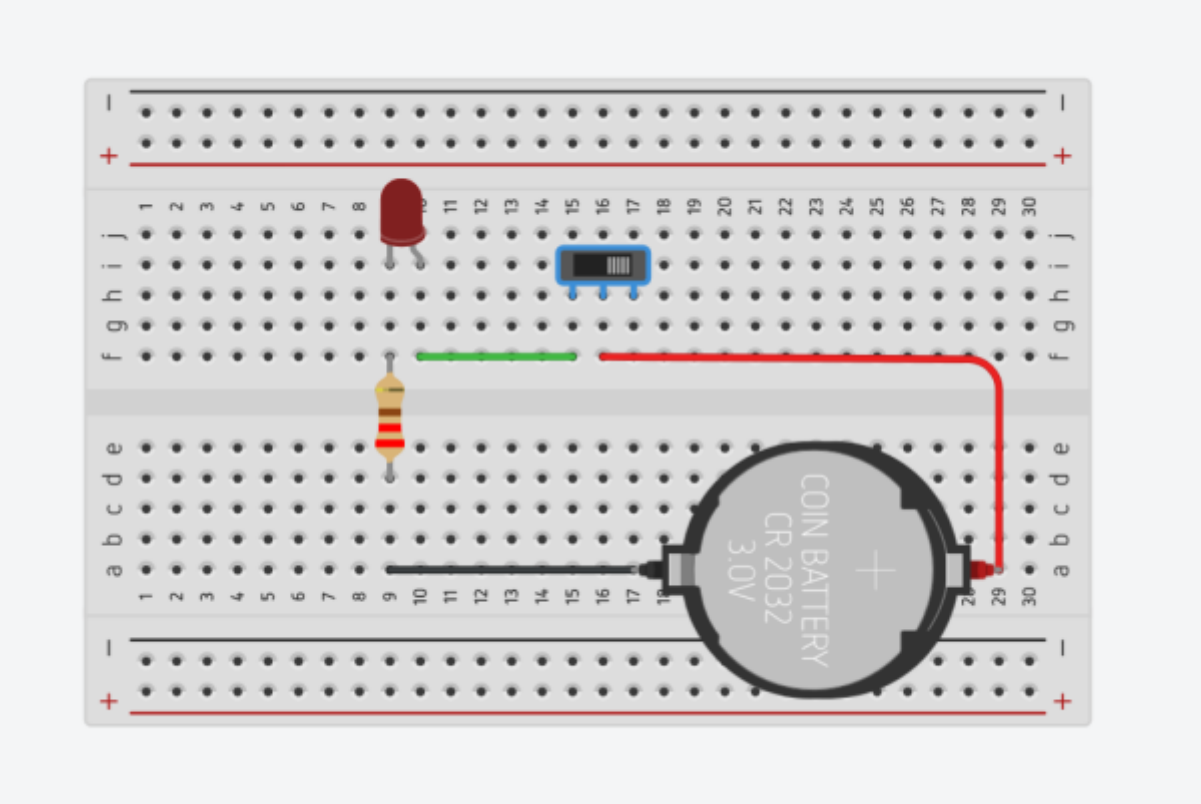

2 leds

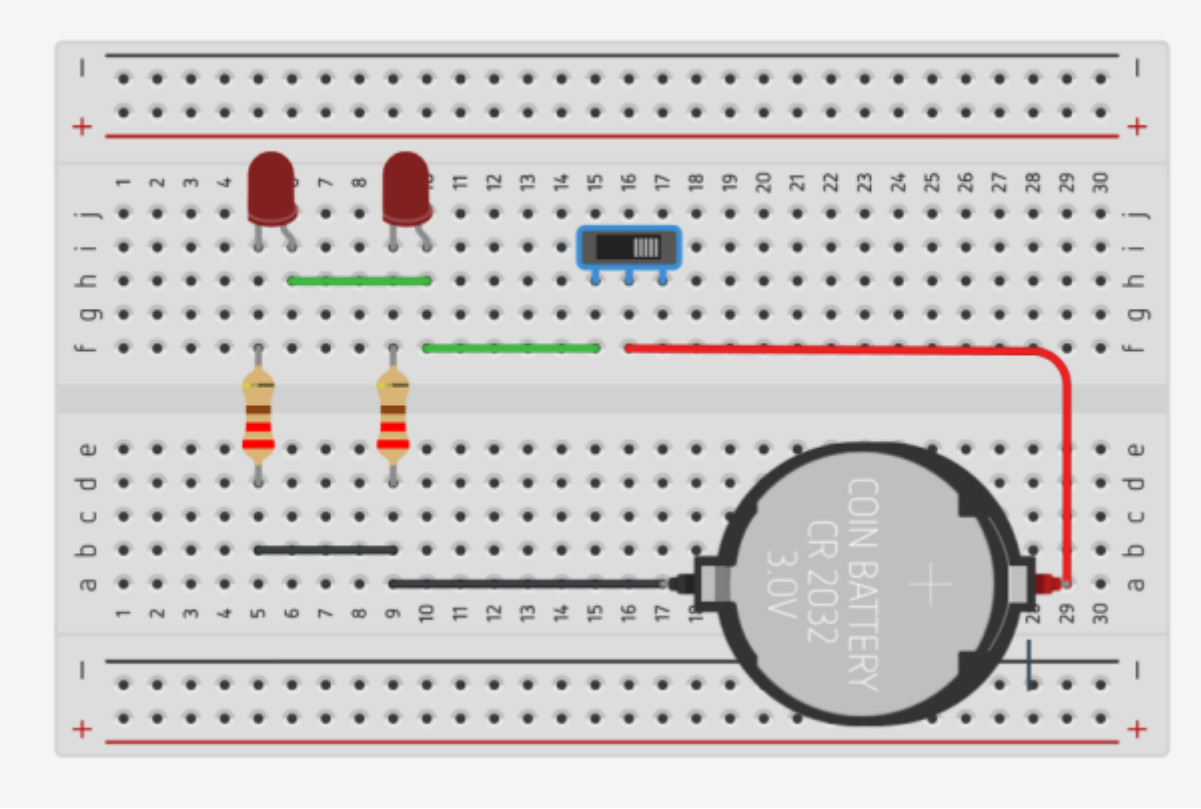

2 leds sur Tinkercad

Led Clignotante

schema principe

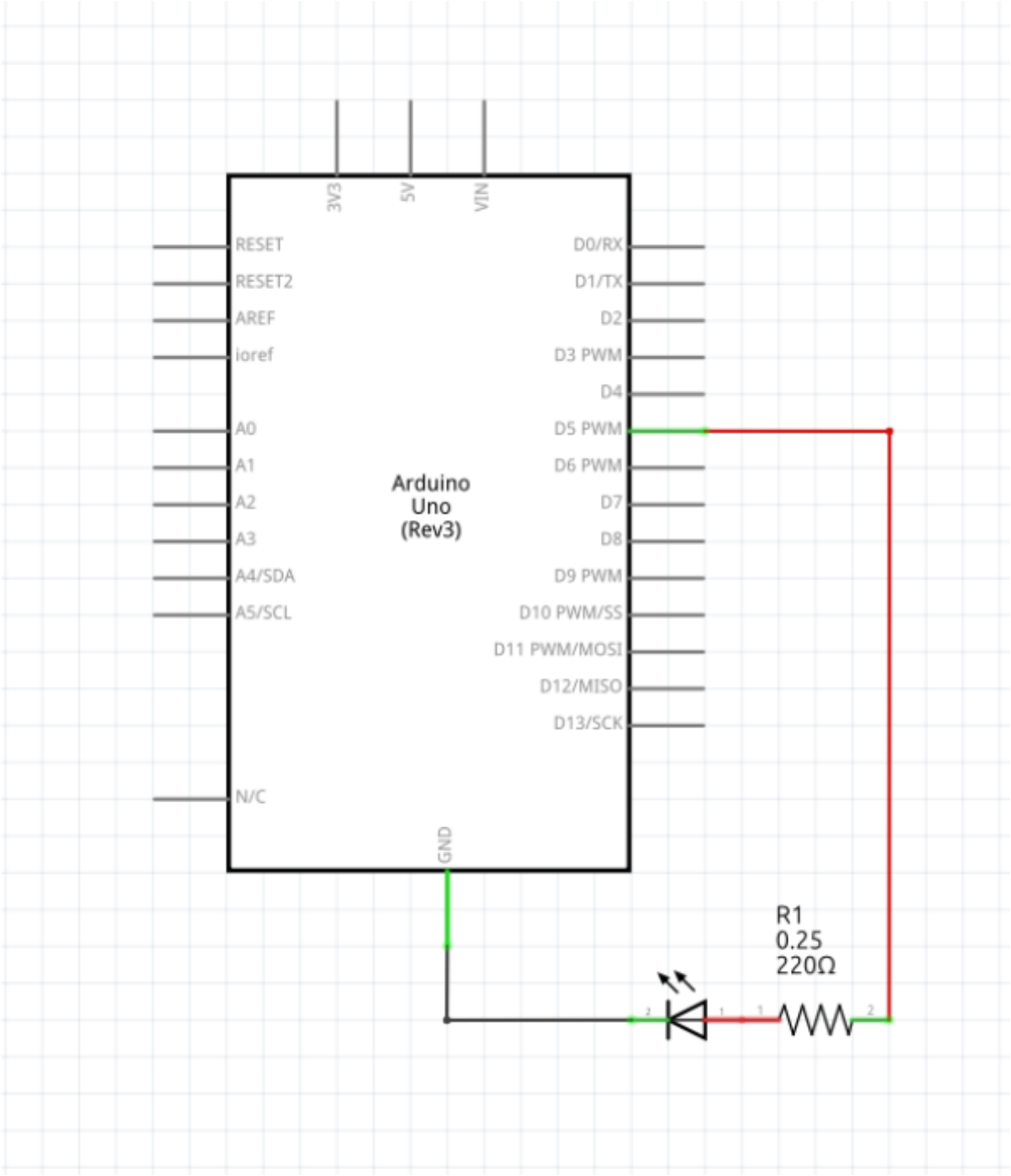

Schema cablage

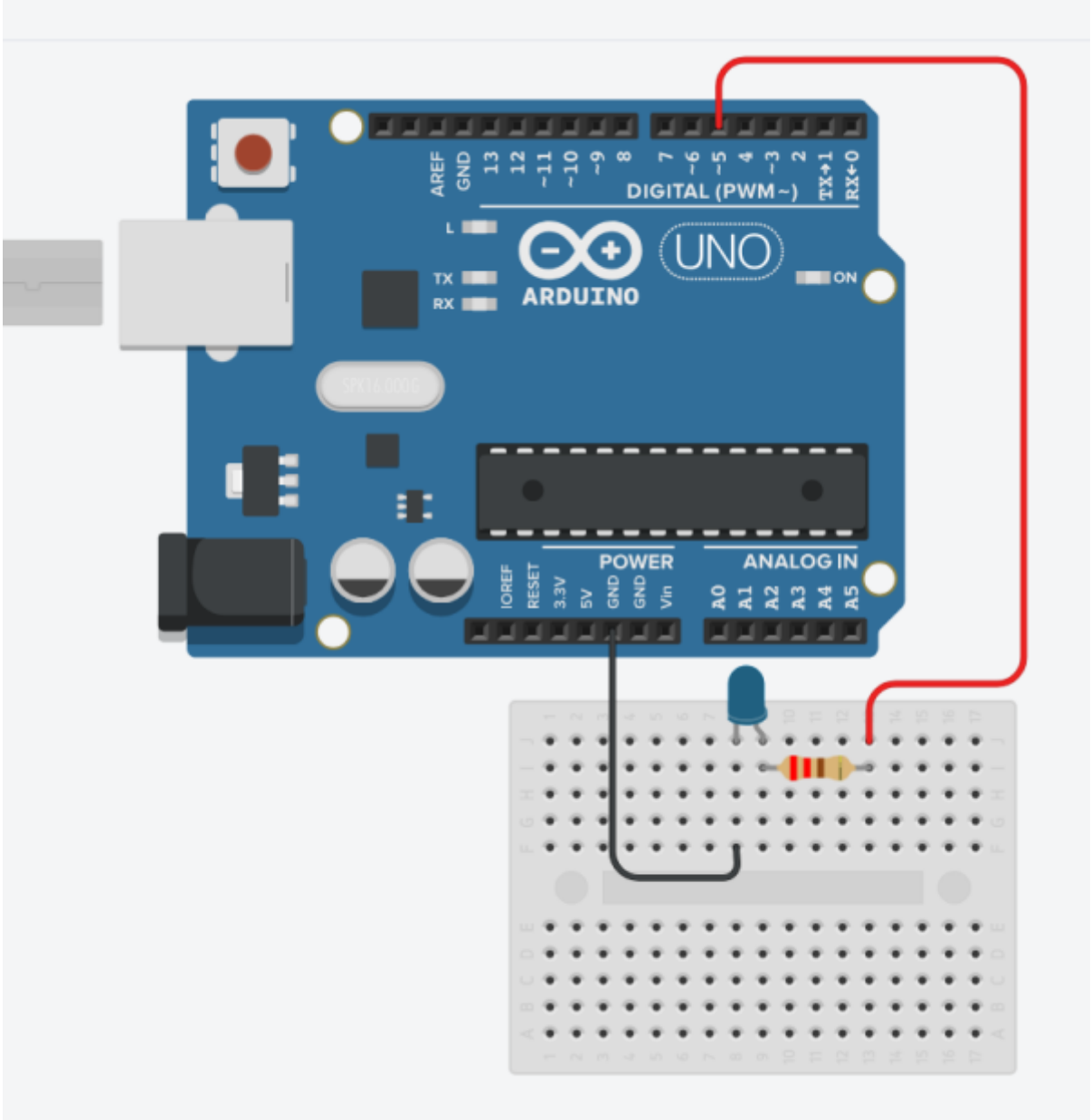

Code

mode texte

ledclignote.ino

```
// C++ code
//
void setup()
{
  pinMode(5, OUTPUT);
}

void loop()
{
  analogWrite(5, 1);
```

```
  delay(1000); // Wait for 1000 millisecond(s)
  analogWrite(5, 0);
  delay(1000); // Wait for 1000 millisecond(s)
}
```

mode bloc

From:
https://www.fablab37110.chanterie37.fr/ - **Castel'Lab le Fablab MJC de Château-Renault**

Permanent link:
https://www.fablab37110.chanterie37.fr/doku.php?id=start:jeunes:prepa:branceleds

Last update: **2025/10/01 21:30**