Exercices Maquettes

exercices_maquette_001.zip

Led resistances

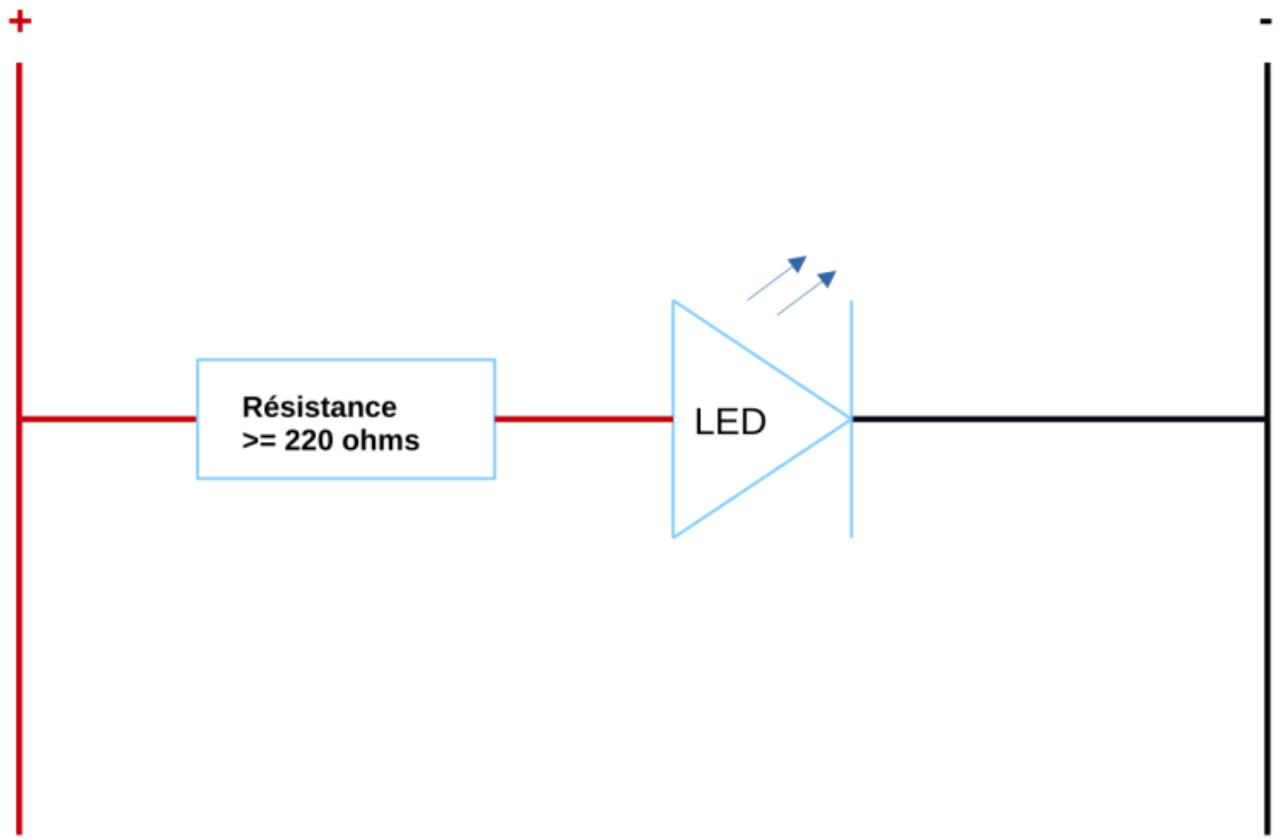

Led Resistance BP

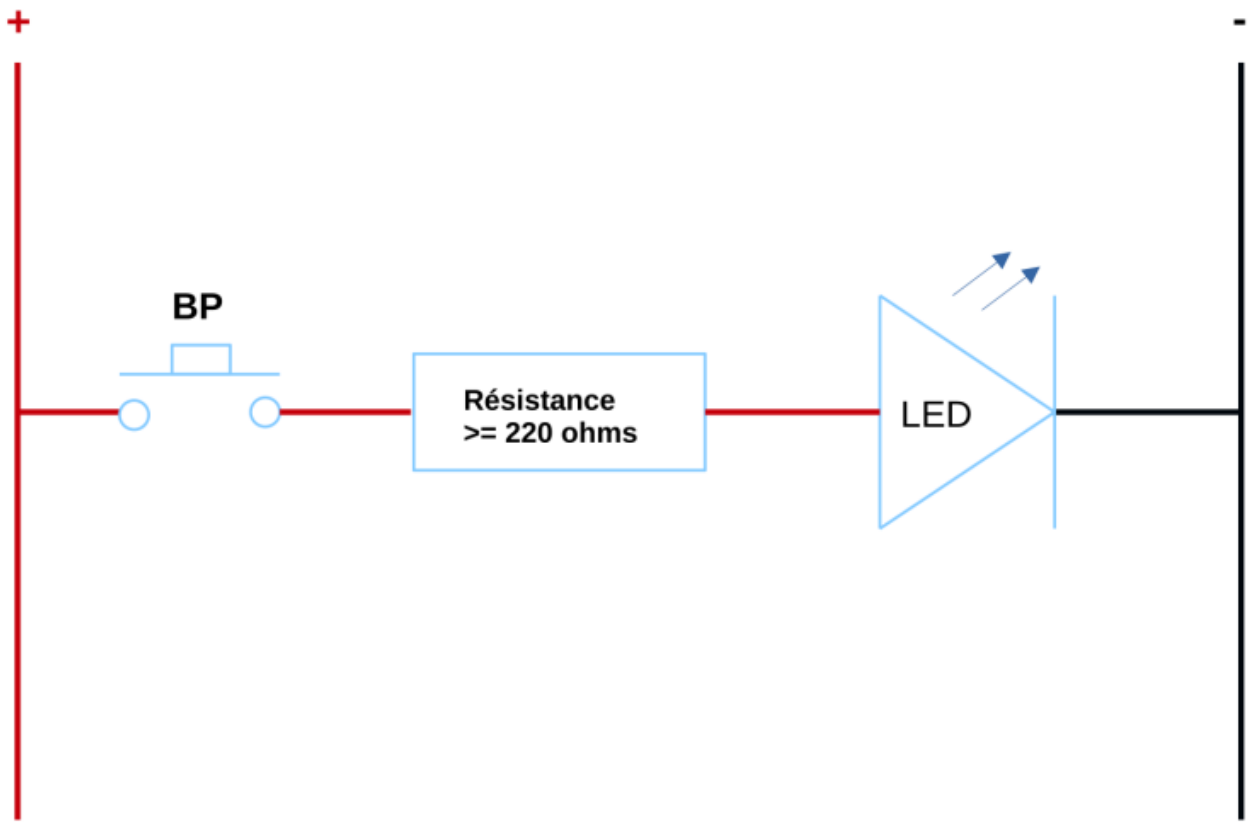

3 LEDS BP

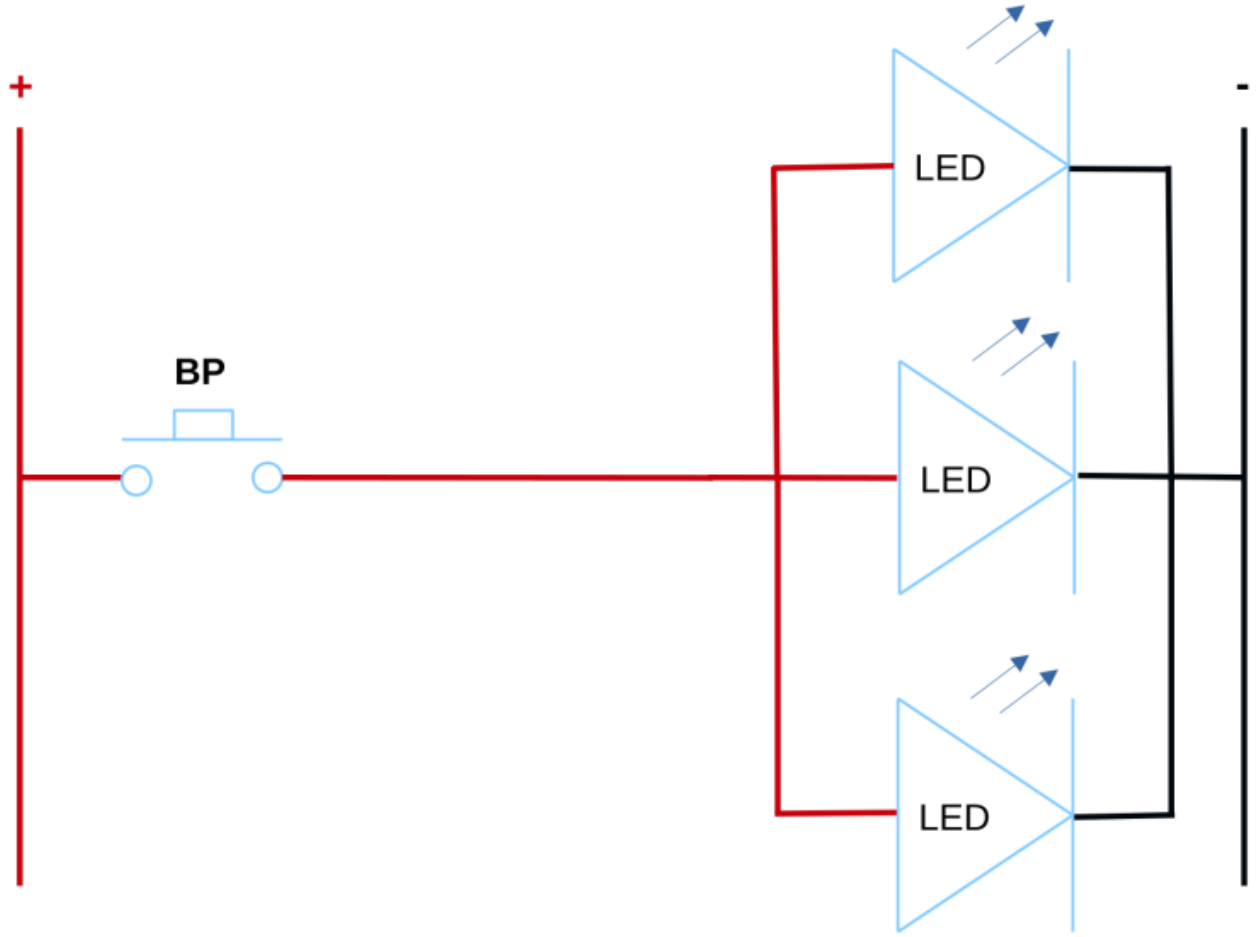

Led BP Volmetre

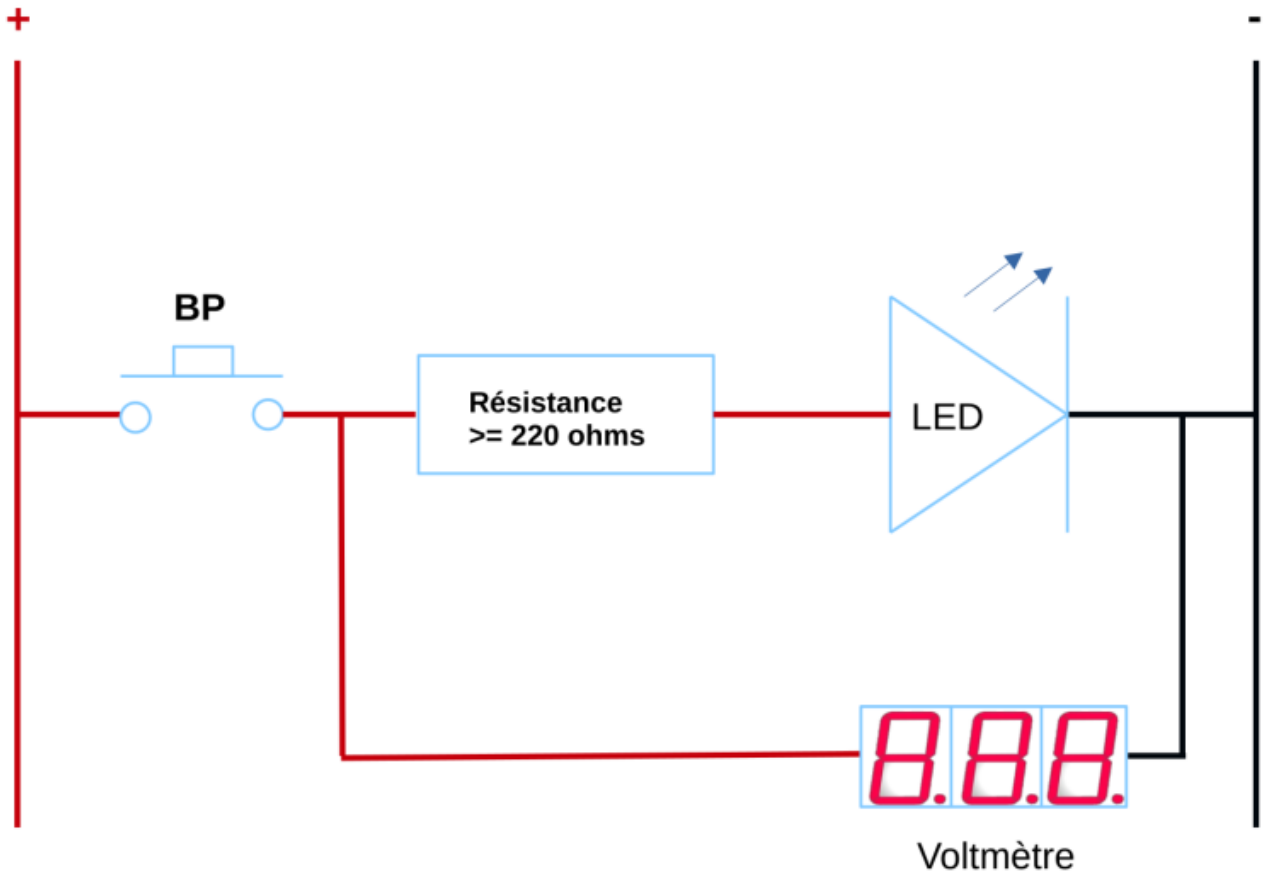

BP inter double LED RVB

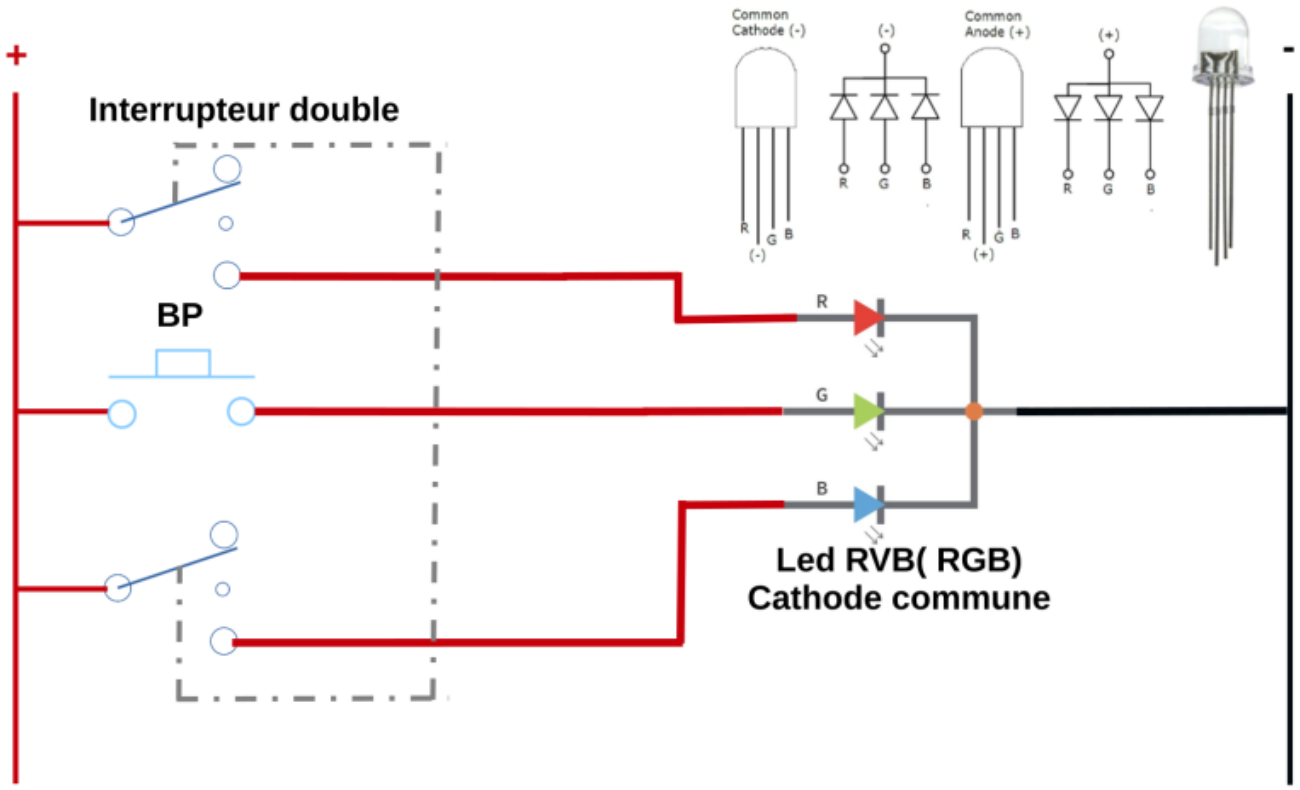

Bp Buzzer Volmetre

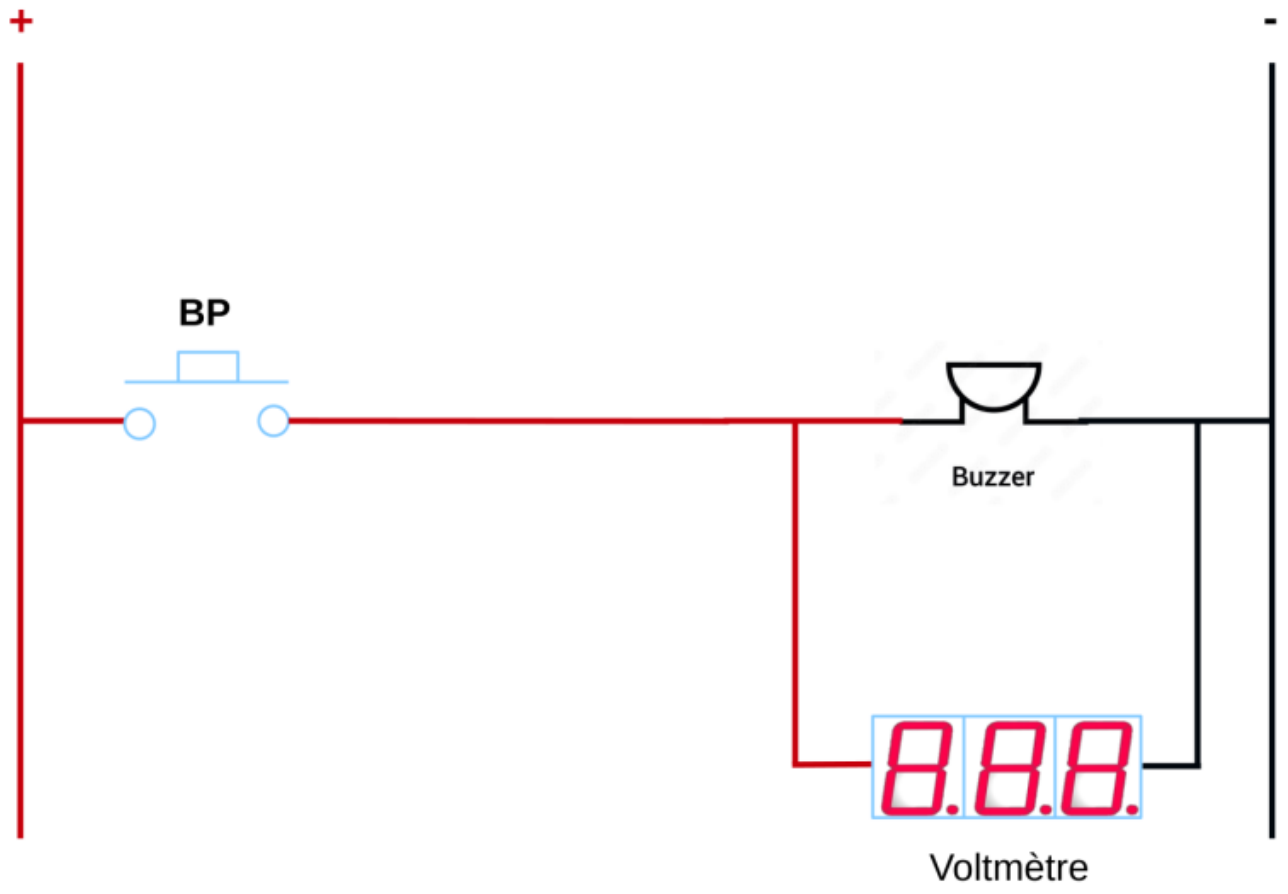

BP Volmetre Led Buzzer

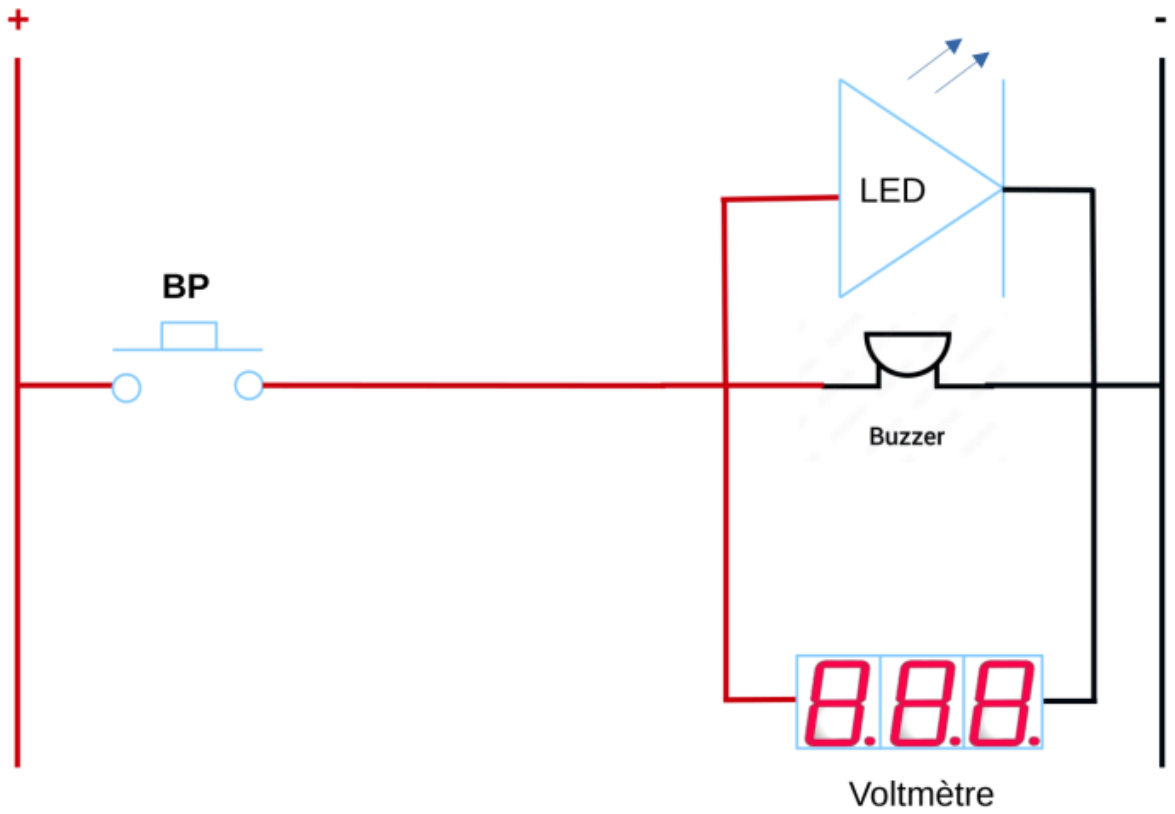

BP Moteur CC

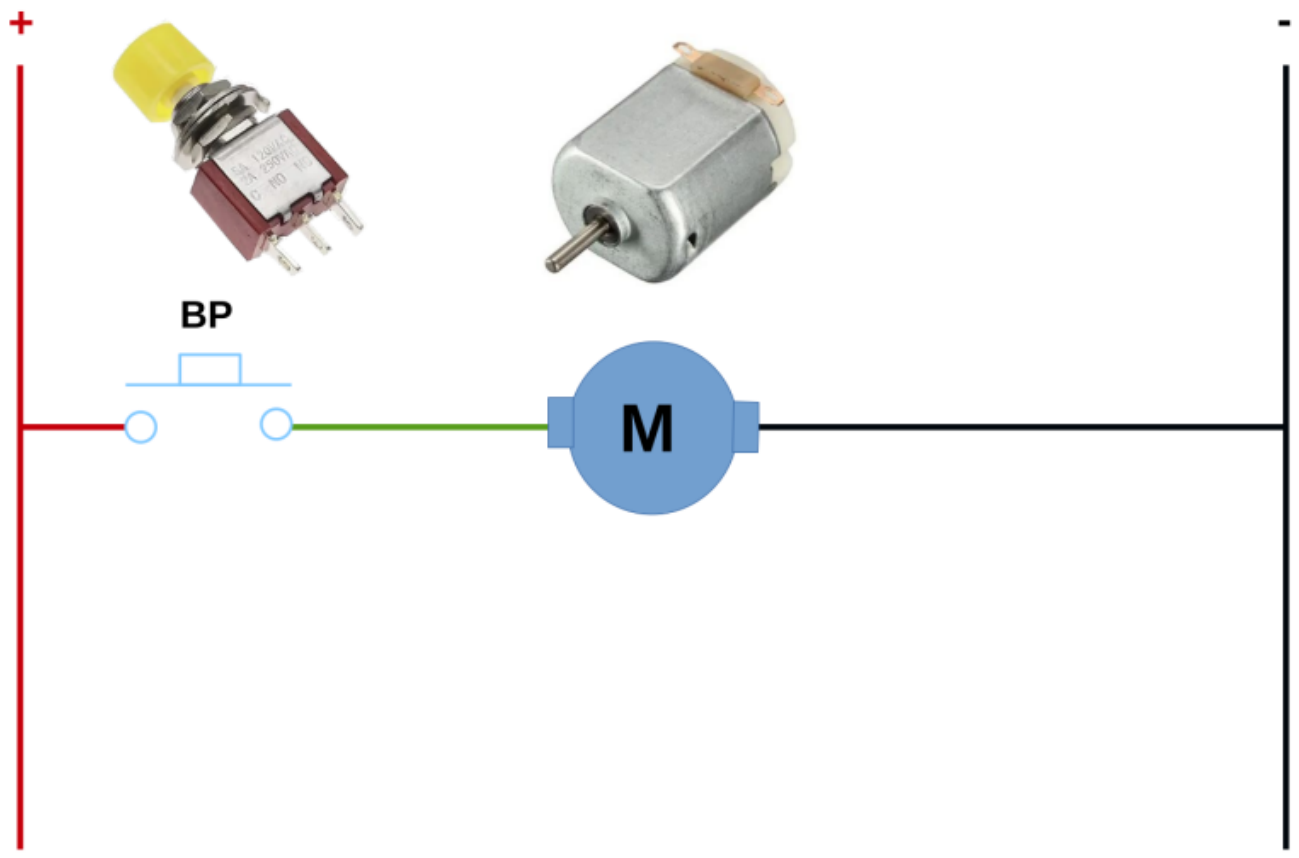

Interrupteur Double 2 sens moteur

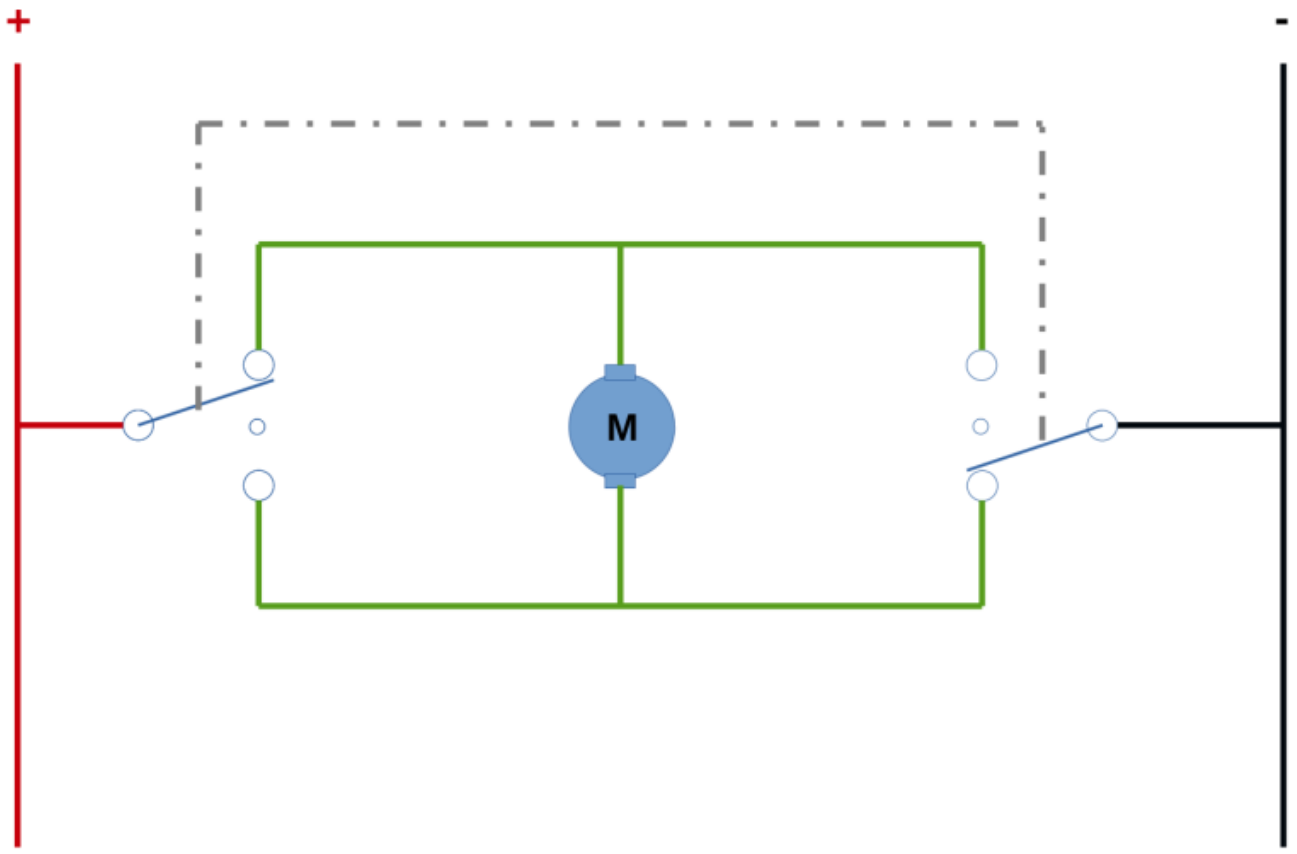

From:
https://www.fablab37110.chanterie37.fr/ - **Castel'Lab le Fablab MJC de Château-Renault**

Permanent link:
https://www.fablab37110.chanterie37.fr/doku.php?id=maquette:exercices&rev=1791389669

Last update: **2026/10/07 18:14**